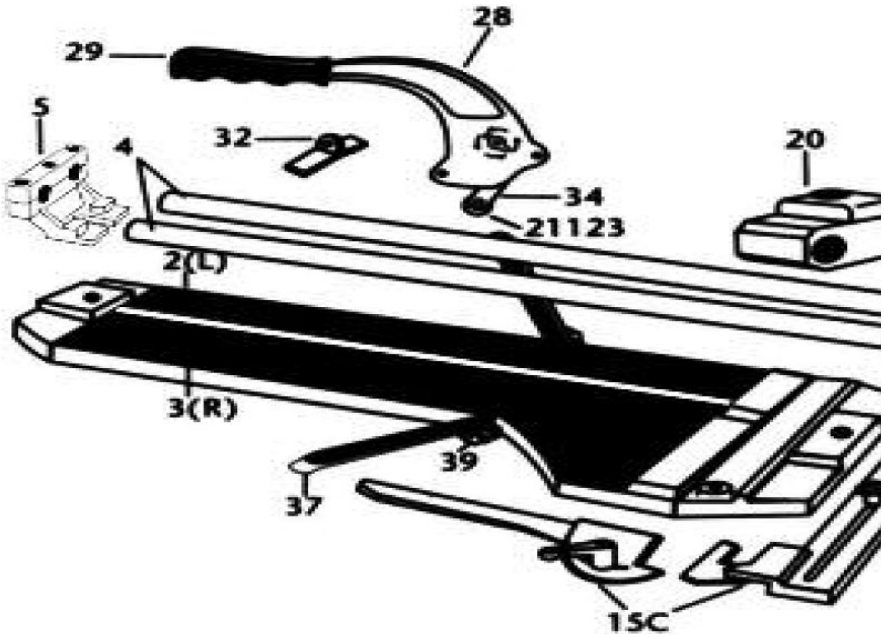Q.E.P. Catalog #	Product Description
24 Brutus Tile Cutter 10600	
10600-2/3	Replacement Pads
10603-4	Rail Bars-New (Pack Of 2)
10603 -5	End Bracket
10603-15C	Complete Guide - Ish
10600-20	Slide Assembly
10600-21	Bering Assembly
10601-28	Handle With Grip
10600-29	Grip
10601-32	Breaker Bar
10601-34	Holder For Ball Bearing Wheel
10601-36	Handle Complete
10601-37	12"Aluminum Arms (Pack Of 2)
10600-39	White Round Head Screw
21123	7/8" Titanium Coated Tungsten Carbide Ball Bearing Cutting Wheel